Executive Summary

Greenie Medi 05G13L is qualified to maintain a payload temperature of between +2 °C and +8 °C for 60 hours under the ISTA 7D Summer and Winter Profiles with 6.3 kg of Greenie pack 05G.

Summer Profile

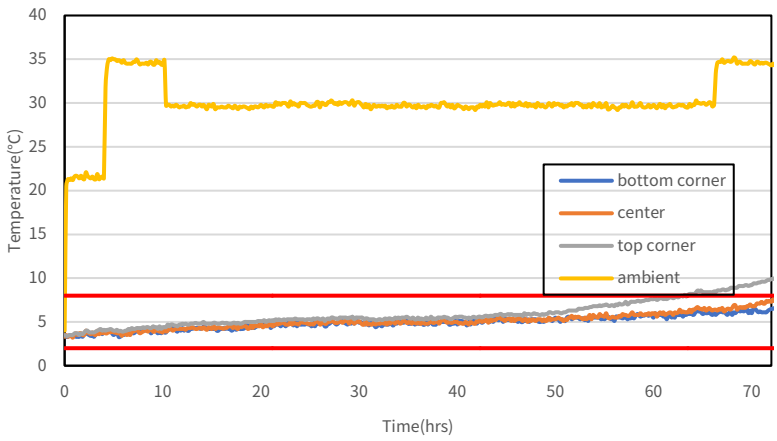

Winter Profile

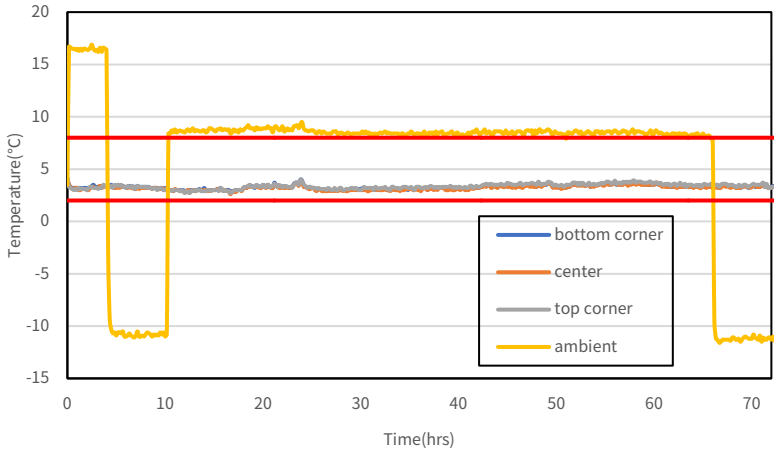

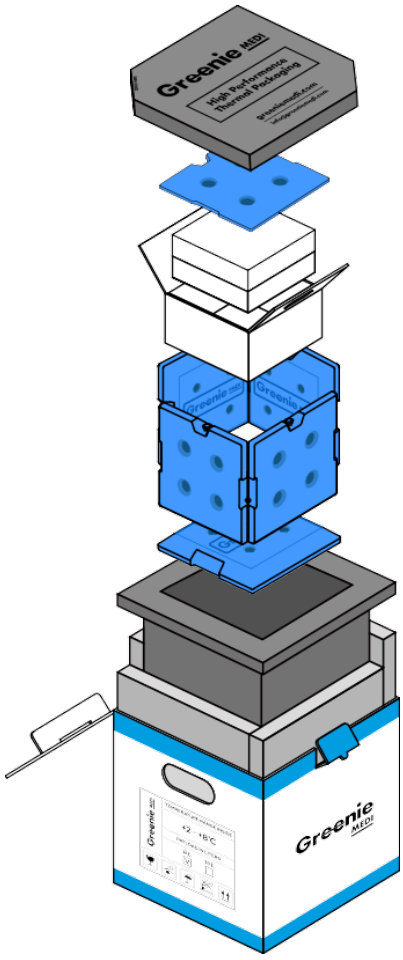

Greenie Medi 05G13L

Product Description

Greenie Medi 05G13L multi-use temperature-controlled packaging.

System Schematic Diagram

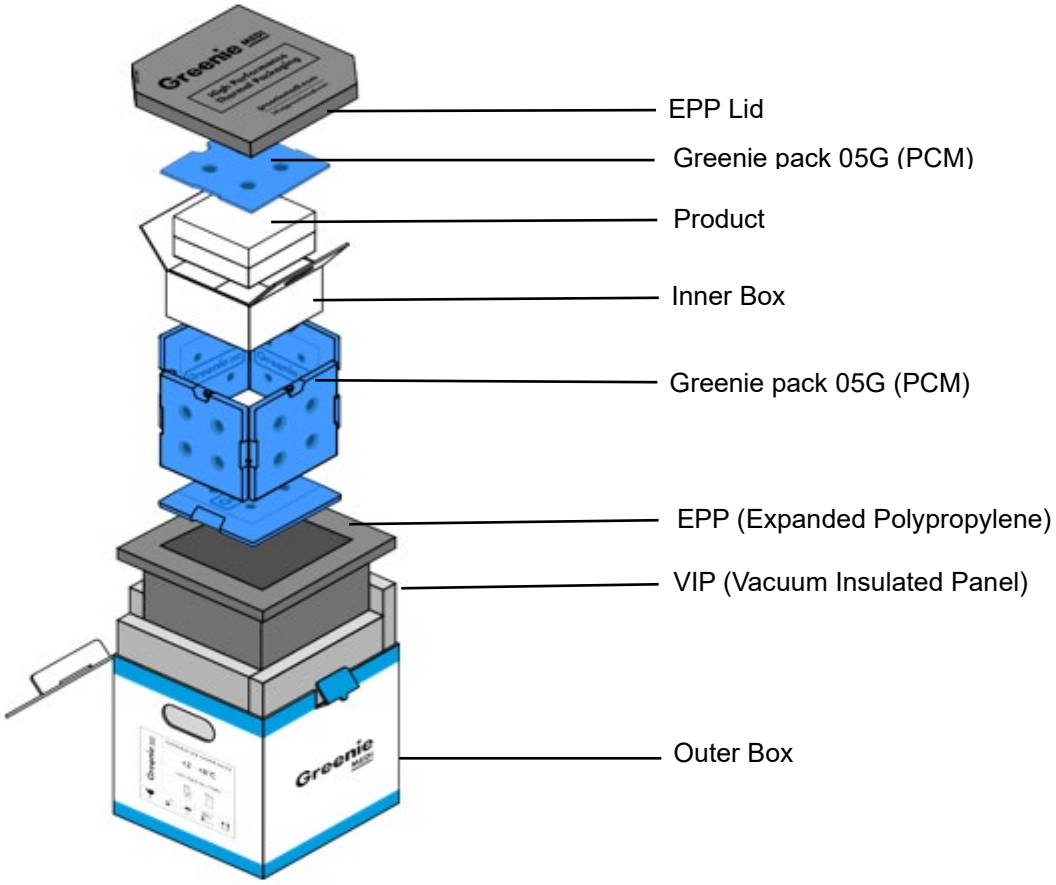

Note: In this test, Greenie Medi was tested with an empty box.

System Specifications

External Dimensions (Width x Length x Height)	445 mm x 430 mm x 465 mm
Internal Dimensions (Width x Length x Height)	290 mm x 290 mm x 290 mm
Payload Dimensions (Width x Length x Height)	238 mm x 238 mm x 238 mm
Volumetric Capacity	13 L
Tare Weight	7.7 kg
Weight per Greenie pack 05G	1.1 kg